Model No. 5601N CIRCULAR SAW 160MM

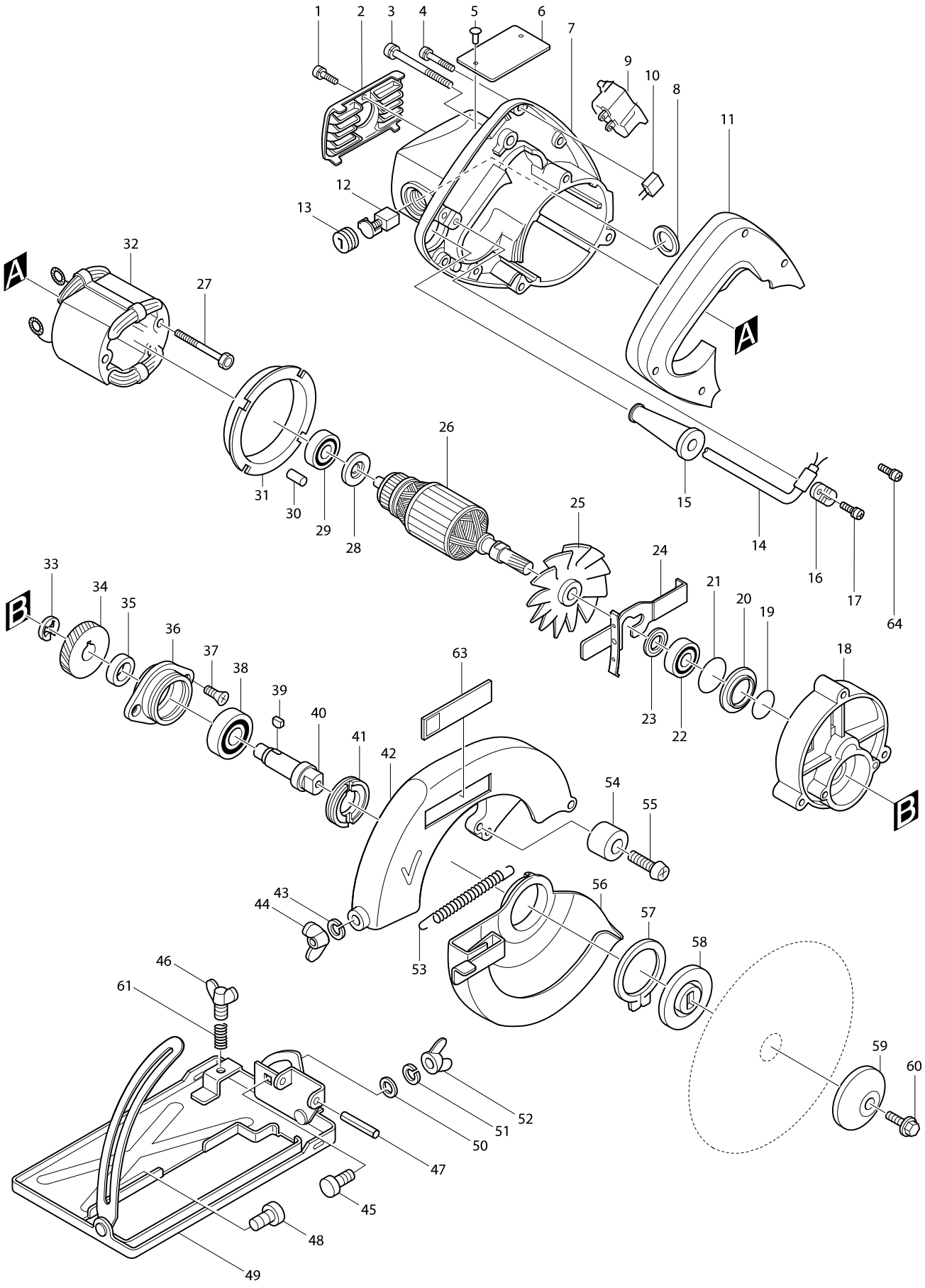

Model No. 5601N CIRCULAR SAW 160MM

Item	Parts No.	Description	I/C	QTY	N/O	Opt. 1	Opt. 2	NOTE
001	911111-5	PAN HEAD SCREW M4X10		1				
002	284038-5	REAR COVER		1				
003	911281-0	PAN HEAD SCREW M5X60		3				
004	911148-2	PAN HEAD SCREW M4X25		2				
005	953106-2	RIVET 0-5		2				
006	815024-1	NAME PLATE 5601N		1				
007-1	156381-1	MOTOR HOUSING		1				
C10	643603-3	BRUSH HOLDER 6-10		2				
C20	913206-0	SET SCREW M5X8		2				
D10		INC. 30						
008	681001-3	INSULATION WASHER		2				
009-2	651240-9	SWITCH SGEL115CD		1				
011	312860-1	HANDLE COVER		1				
012B_	181030-1	CARBON BRUSH CB-100		1	*			
012B1	194974-6	CARBON BRUSH SET CB-100	<	1				
013	643600-9	BRUSH HOLDER CAP 6-10		2				
014R1	691134-6	POWER SUPPLY CORD 0.75-3-2.5		1				
015	682504-0	CORD GUARD 10-85		1				
016	687600-9	STRAIN RELIEF		1				
017-1	911123-8	PAN HEAD SCREW M4X14		2				
018	156382-9	GEAR HOUSING		1				
C10	214001-4	PLANE BEARING 8		1				
C20	286001-4	CAP 14		1				
D12		INC. 21-2						
019	213008-7	O RING 22.4		1				
020	343295-5	WASHER 19		1				
021-2	213407-3	O RING 26		1				
022-2	211056-0	BALL BEARING 629LLB		1	*			
022-3	210042-8	BALL BEARING 629LLB	O	1				
023	253768-9	FLAT WASHER 9		1				
024	163096-3	SPINDLE LOCK		1				
025	241023-1	FAN 68		1				
026C_	512603-3	ARMATURE ASS'Y 220V		1				
027-1	911280-2	PAN HEAD SCREW M5X55		2				
028	253767-1	FLAT WASHER 8		1				
029	211031-6	BALL BEARING 608LLB		1				
030	263002-9	RUBBER PIN 4		1				
031	343288-2	BAFFLE PLATE		1				
032C_	522064-9	FIELD ASS'Y 220V		1				
033	961016-9	STOP RING E-10		1				
034	221604-7	HELICAL GEAR 46		1				
035	257010-0	RING 12		1				
036	312261-3	BEARING BOX		1				
037	251295-0	+ COUNTERSUNK HEAD SCREW M4X		2				
038	211106-1	BALL BEARING 6201LLB		1				
039	254011-9	WOODRUFF KEY 4		1				
040	325239-7	SPINDLE		1				
041	285802-7	BEARING RETAINER 19-33		1				

Model No. 5601N CIRCULAR SAW 160MM

Item	Parts No.	Description	I/C	QTY	N/O	Opt. 1	Opt. 2	NOTE
042	312857-0	BLADE CASE		1				
043	942151-2	SPRING WASHER 6		1				
044	934301-3	WING NUT M6		1				
045	251919-8	CAP SQUARE NECK BOLT M6X20		1				
046	924316-8	WING BOLT M6X15		1				
047	951175-7	SPRING PIN 5-36		1				
048	251919-8	CAP SQUARE NECK BOLT M6X20		1				
049	133144-2	BASE ASS'Y		1				
D10		INC. 45,50-52						
050	941151-9	FLAT WASHER 6		1				
051	942151-2	SPRING WASHER 6		1				
052	934301-3	WING NUT M6		1				
053	231744-3	TENSION SPRING 4		1				
054	262502-6	RUBBER SLEEVE 6		1				
055	251247-1	+ PAN HEAD SCREW M6X20		1				
056-1	164428-7	SAFETY COVER		1				
057	961155-5	RETAINING RING S-38		1				
058	224180-0	INNER FLANGE 45		1				
059	224011-3	OUTER FLANGE 45		1				
060	251609-3	HEX. FLANGE HEAD BOLT M6X17		1				
061	231316-4	COMPRESSION SPRING 7		1				
062	253964-9	WASHER 5		2	*			
063	819003-1	MAKITA LABEL		1				
064	652014-1	PAN HEAD SCREW M4X8		1				
400	164095-8	GUIDE RULE		1				
401	792037-8	CHISEL T. COMBI. SAW BLADE 160		1	*			
401-1	A-81371	T.C.T. SAW BLADE 160X24TX20	O	1				
402	782209-3	SOCKET WRENCH 9		1				
900	253737-0	FLAT WASHER		1	*			