Model No. 6826 SCREWDRIVER

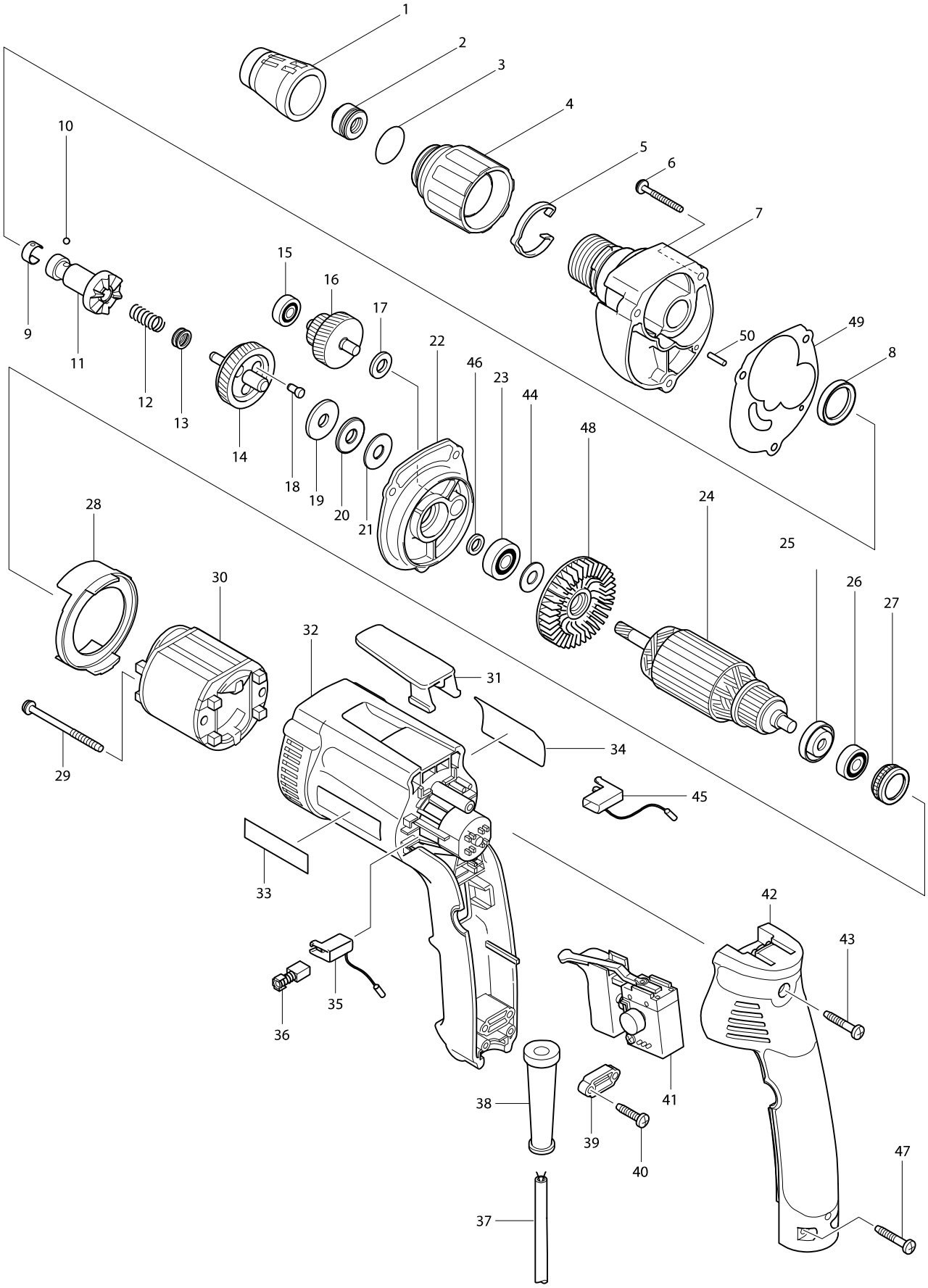

Model No. 6826 SCREWDRIVER

Item	Parts No.	Description	I/C	QTY	N/O	Opt. 1	Opt. 2	NOTE
001	152822-5	LOCATOR COMPLETE 5/16"		1				
002	421775-2	DUST SEAL RING		1				
003	213373-4	O RING 22		1				
004	416994-3	LOCK RING		1	*			
004-1	455428-1	LOCK RING	O	1				
005	232154-7	LEAF SPRING		1	*			
005-1	232154-7	LEAF SPRING	<	1				
006	266050-7	TAPPING SCREW 4X30		3				
007-1	152880-1	GEAR HOUSING COMPLETE		1				
008	421766-3	RING 20		1				
009	232050-9	LEAF SPRING		1				
010	216001-0	STEEL BALL 3.5		1				
011	152838-0	SPINDLE COMPLETE		1				
012	233257-0	COMPRESSION SPRING 8		1				
013	267202-3	FLAT WASHER 8		2				
014	152837-2	GEAR COMPLETE		1				
015	211014-6	BALL BEARING 606		1	*			
015-1	211012-0	BALL BEARING 606ZZ	O	1				
016	226133-5	GEAR COMPLETE 17-35		1				
017	267017-8	FLAT WASHER 8		1				
018	256439-7	PIN 4		3	*			
018-1	256467-2	SHOULDER PIN 4	O	3				
019	216213-5	WASHER 824		1				
020	216415-3	THRUST NEEDLE GAUGE 821		1				
021	216212-7	WASHER 821		1				
022-2	152912-4	GEAR HOUSING COVER COMPLETE		1				
023	210007-0	BALL BEARING 608VV		1				
024A_	517323-4	ARMATURE ASS'Y 220V		1				
D10		INC. 23,25,26,44,48						
025	681636-0	INSULATION WASHER		1				
026	211021-9	BALL BEARING 607LLB		1				
027	421479-6	RUBBER RING 19		1				
028	416993-5	BAFFLE PLATE		1				
029	266147-2	TAPPING SCREW 4X55		2				
030A_	633443-7	FIELD 220-240V		1				
031	417625-7	HOOK		1				
032	183285-4	MOTOR HOUSING		1	*			
D10		INC. 33			*			
032-1	188628-5	MOTOR HOUSING	S	1	*			
D10		INC. 33			*			
032-2	450718-7	MOTOR HOUSING	<	1				
033	819063-3	MAKITA LABEL		1	*			
034	852983-8	NAME PLATE 6826		1	*			
034-1	860146-2	NAME PLATE 6826	O	1				
035	643952-8	BRUSH HOLDER		1				
036A_	191962-4	CARBON BRUSH CB-419		1	*			
036A1	195015-1	CARBON BRUSH CB-419	<	1				
037I_	691015-4	POWER SUPPLY CORD 0.75-2-2.5		1				

Please order the parts with a part number.

Model No. 6826 SCREWDRIVER

Item	Parts No.	Description	I/C	QTY	N/O	Opt. 1	Opt. 2	NOTE
038A_	682504-0	CORD GUARD 10-85		1	*			
038A1	682566-8	CORD GUARD 10	<	1				
039A_	687053-2	STRAIN RELIEF		1				
040	265995-6	TAPPING SCREW 4X18		2				
041	651978-6	SWITCH C3MA-2L		1	*			
041-1	651978-6	SWITCH C3MA-2L	O	1				
042	151961-8	HANDLE COVER COMPLETE		1	*			
C10	263002-9	RUBBER PIN 4		2	*			
042-1	158710-4	HANDLE COVER COMPLETE	S	1				
C10	263002-9	RUBBER PIN 4		2				
043	265999-8	TAPPING SCREW 4X25		1				
044	253139-0	FLAT WASHER 8		1				
045	643953-6	BRUSH HOLDER		1				
046	262087-2	RING 8		1	*			
047	265999-8	TAPPING SCREW 4X25		2				
048	240022-0	FAN 52		1				
049	442136-3	GASKET		1				
050	256157-7	PIN 3		1				
A01	784804-5	MAGNETIC SOCKET BIT 5/16-65		1				
A02	824449-8	PLASTIC CARRYING CASE		1				
C10	182935-8	SLIDE LATCH (R.L) SET		1				