Model No. 6910 IMPACT WRENCH

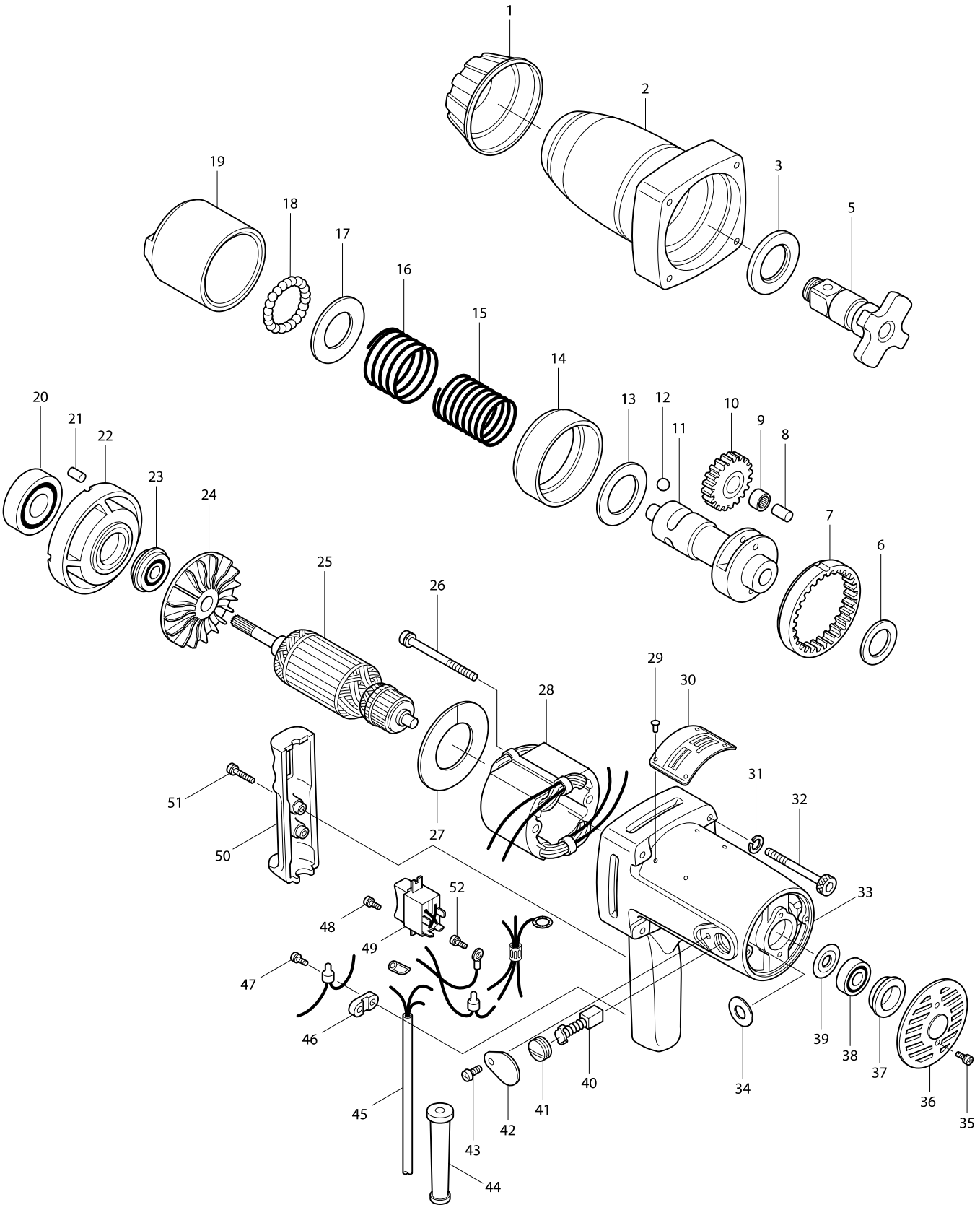

Model No. 6910 IMPACT WRENCH

Item	Parts No.	Description	I/C	QTY	N/O	Opt. 1	Opt. 2	NOTE
001	421120-1	BUMPER		1				
002	156135-6	HAMMER CASE		1				
C10	213456-0	OIL SEAL 35		1				
C20	257536-2	SLEEVE 35		1				
003	253909-7	FLAT WASHER 35		1				
004	231921-7	RING SPRING 22		1				
005	325587-4	ANVIL		1				
006	253182-9	FLAT WASHER 36		1				
007	221815-4	INTERNAL GEAR 82		1				
008	256051-3	PIN 10		2				
009	212063-6	NEEDLE BEARING 1012		2				
010	221816-2	SPUR GEAR 37		2				
011	325416-1	SPINDLE		1				
012	216010-9	STEEL BALL 10.3		2				
013	253713-4	FLAT WASHER 35		1				
014	333112-7	RING 79		1				
015	231211-8	COMPRESSION SPRING 36		1				
016	231212-6	COMPRESSION SPRING 49		1				
017	253712-6	FLAT WASHER 36		1				
018	216002-8	STEEL BALL 4.8		32				
019	325415-3	HAMMER		1				
020	211451-4	BALL BEARING 6007LLB		1				
021	256040-8	PIN 5		2				
022	312739-6	BEARING HOUSING		1				
023	211217-2	BALL BEARING 1511LLB		1				
024	241613-0	FAN 90		1				
025C_	513285-4	ARMATURE ASS'Y 220V		1				
D10		INC. 23-25,38,39						
026-2	265343-9	+ HEX. BOLT M5X80		2				
027	413009-7	BAFFLE PLATE		1				
028C_	623255-6	FIELD 220V		1				
029	953106-2	RIVET 0-5		4				
030	815015-2	NAME PLATE 6910		1				
031	942151-2	SPRING WASHER 6		4				
032	922382-9	HEX. SOCKET HEAD BOLT M6X60		4				
033	156136-4	MOTOR HOUSING		1				
C10	643653-8	BRUSH HOLDER 6.5-13.5		2				
C20	913206-0	SET SCREW M5X8		2				
C30	951104-0	SPRING PIN 4-12		1				
034	681002-1	INSULATION WASHER		2				
035	911216-1	PAN HEAD SCREW M5X14		2				
036	284016-5	REAR COVER		1				
037	421075-0	CUSHION RING		1				
038	211066-7	BALL BEARING 6200LLB		1				
039	213051-6	DUST SEAL 10		1				
040-2	181044-0	CARBON BRUSH CB-153		1	*			
040-3	194985-1	CARBON BRUSH CB-153	<	1				
041	643650-4	BRUSH HOLDER CAP 6.5-13.5		2				

Model No. 6910 IMPACT WRENCH

Item	Parts No.	Description	I/C	QTY	N/O	Opt. 1	Opt. 2	NOTE
042	341367-0	BRUSH HOLDER CAP COVER		2				
043	911111-5	PAN HEAD SCREW M4X10		2				
044	682506-6	CORD GUARD 12-90		1				
045R1	691337-2	POWER SUPPLY CORD 1.25-3-2.5		1				
046	687600-9	STRAIN RELIEF		1				
047	911116-5	PAN HEAD SCREW M4X12		2				
048	911106-8	PAN HEAD SCREW M4X8		1				
049-1	651558-8	SWITCH SL220SD-4		1				
050	312742-7	HANDLE COVER		1				
051	911146-6	PAN HEAD SCREW M4X25		2				
400	273444-9	GRIP 37		1				
401	312743-5	GRIP BASE		1				
402	923456-9	CAP SQUARE NECK BOLT M8X35		1				
403	345097-5	BELT		1				
404	133184-0	SOCKET 41-80		1	*			
D10		INC. 405,406			*			
404-1	134872-2	SOCKET 41-80 ASS'Y	O	1				
D10		INC. 405,406						
405	213603-3	O RING 47		1	*			
405-1	213570-2	O-RING 44	X	1				
406	256091-1	PIN 5.5		1	*			
406-1	256284-0	PIN 5	X	1				
407	783203-8	HEX. WRENCH 5		1	*			
408-3	182363-7	STEEL CARRYING CASE		1	*			
C10	819033-2	MAKITA LABEL		1	*			
408-4	182363-7	STEEL CARRYING CASE	O	1				
C10	819143-5	MAKITA LABEL		1				
409	941201-0	FLAT WASHER 8		1				
500	123018-5	SIDE GRIP ASS'Y		1				
D10		INC. 400-403,409						