Model No. 8381D CORDLESS HAMMER DRIVER DRILL

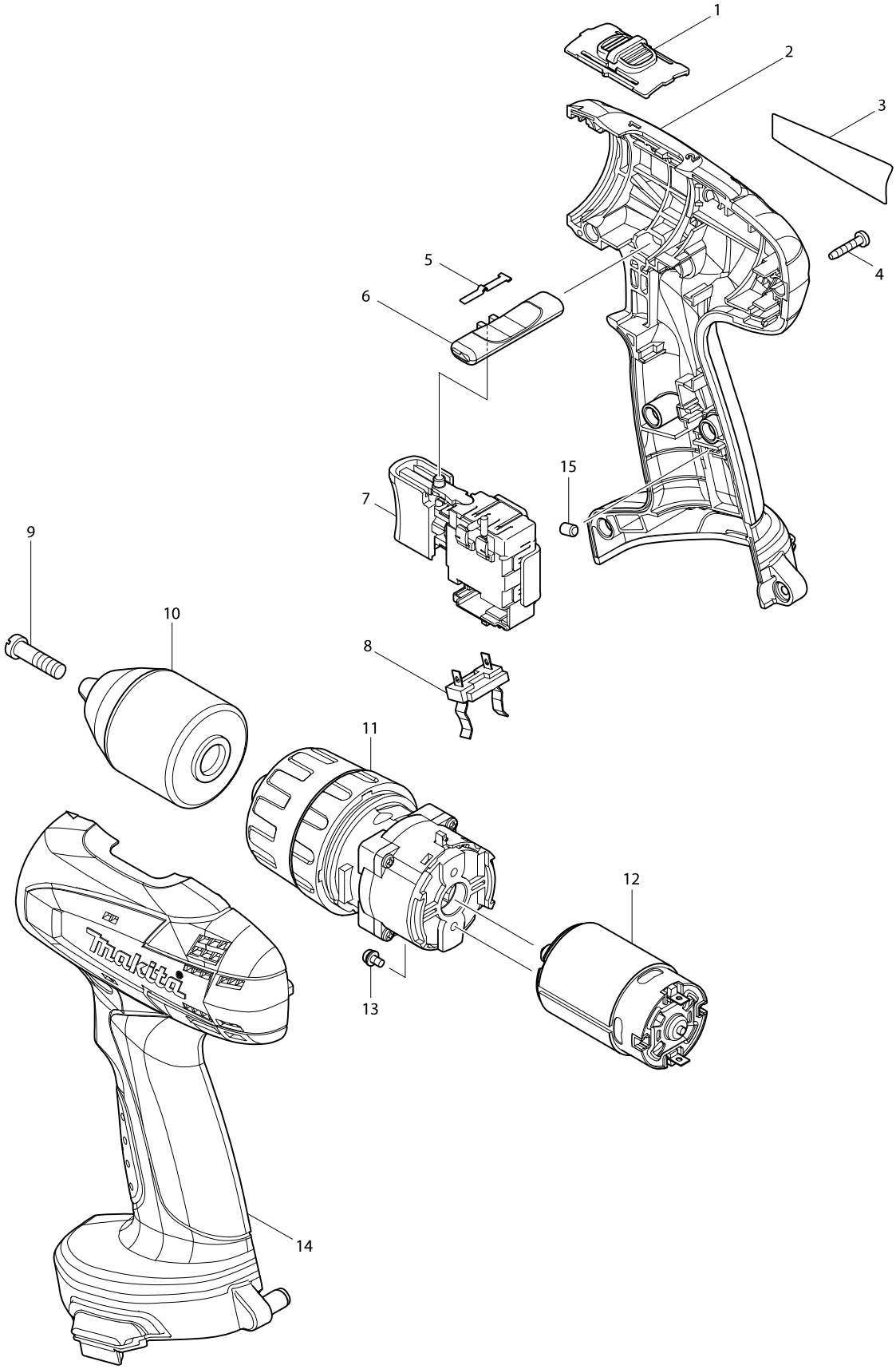

Model No. 8381D CORDLESS HAMMER DRIVER DRILL

Item	Parts No.	Description	I/C	QTY	N/O	Opt. 1	Opt. 2	NOTE
001	125310-5	SPEED CHANGE LEVER ASS'Y		1				
C10	231433-0	COMPRESSION SPRING 4		2				
002	188512-4	HOUSING SET		1	*			
D10		INC. 14			*			
002-1	187301-4	HOUSING SET	<	1				
D10		INC. 14						
003	865196-2	8381D NAME PLATE		1				
004	266130-9	TAPPING SCREW BIND PT 3X16		9				
005	232182-2	LEAF SPRING		1				
006	450584-2	F/R CHANGE LEVER		1				
007	650601-0	SWITCH TG563FSB-2		1	*			
007-1	650601-0	SWITCH TG563FSB-2	O	1	*			
007-2	650663-8	SWITCH TG563FSB-2	<	1	*			
007-3	650672-7	SWITCH TG563FSB-2	<	1				
008	643909-9	BATTERY HOLDER		1				
009	251468-5	- FLAT HEAD SCREW M6X22		1				
010	766004-9	KEYLESS DRILL CHUCK 13		1	*			
010-1	766004-9	KEYLESS DRILL CHUCK 13	O	1				
011	125484-2	GEAR ASS'Y		1				
012	629823-3	DC MOTOR		1				
013	911003-8	PAN HEAD SCREW M3X6		2				
014	188512-4	HOUSING SET		1	*			
D10		INC. 2			*			
014-1	187301-4	HOUSING SET	<	1				
D10		INC. 2						
015	263024-9	RUBBER PIN 4		2				
A01	784636-0	+- BIT 2-65		1				
A02	414938-7	BATTERY COVER		1				
A03	***DC1414	DC1414 BATTERY CHARGER		1				
A04	192600-1	HIGH CAPACITY BATTERY 1422 SET		1				
A05	824852-3	PLASTIC CARRYING CASE		1				
C10	163455-1	LATCH		2				

Please order the parts with a part number.

Print Date 2018/03/22