Model No. HR3520 ROTARY HAMMER 35MM

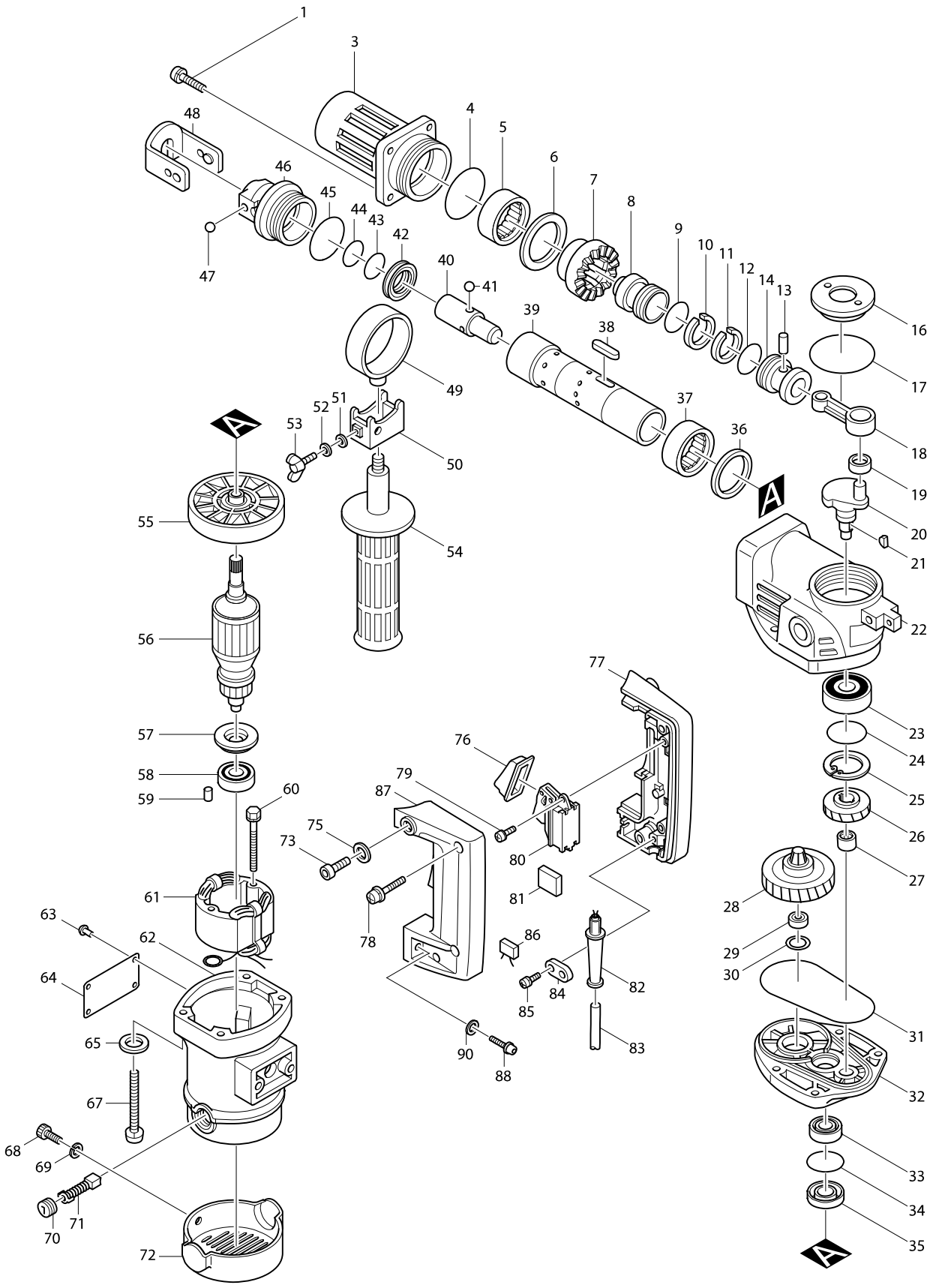

Model No. HR3520 ROTARY HAMMER 35MM

Item	Parts No.	Description	I/C	QTY	N/O	Opt. 1	Opt. 2	NOTE
001-1	922341-3	HEX. SOCKET HEAD BOLT M6X25		4				
003	311612-7	BARREL		1				
004	213655-4	O RING 56		1				
005	212502-6	NEEDLE BEARING 4016		1				
006	253817-2	FLAT WASHER 40		1				
007	221367-5	SPIRAL BEVEL GEAR 36		1				
008-1	322197-8	STRIKER		1	*			
008-2	322806-9	STRIKER	X	1				
009-1	213381-5	O RING 21		1				
010	412037-9	PISTON RING 29		1				
011	412037-9	PISTON RING 29		1				
012-1	213381-5	O RING 21		1				
013	256006-8	PIN 8		1				
014-1	322196-0	PISTON		1				
016-1	150367-7	CRANK CAP COMPLETE		1	*			
C10	810712-5	CAUTION LABEL		1	*			
016-2	411662-3	CRANK CAP	O	1				
017	213554-0	O RING 44		1				
018	315248-4	ROD		1				
019	212065-2	NEEDLE BEARING 1012		1				
020	321725-6	CRANK SHAFT		1				
021	254002-0	WOODRUFF KEY 3		2				
022-1	159507-4	CRANK HOUSING		1				
C10	810710-9	CAUTION LABEL		1				
D10		INC. 24						
023	211259-6	BALL BEARING 6203		1	*			
023-1	211281-3	BALL BEARING 6203LLU	O	1				
024	213507-9	O RING 40		1				
025	962157-4	RETAINING RING R-40		1				
026	221676-2	HELICAL GEAR 36		1				
027	212005-0	NEEDLE BEARING 810		1				
028-2	151176-7	TORQUE LIMITER COMPLETE		1				
029	211034-0	BALL BEARING 608		1				
030	253314-8	THIN WASHER 15		1				
031	213854-8	O RING 97		1	*			
031-1	421688-7	SEAL RING	X	1				
032	157304-2	GEAR HOUSING		1	*			
D10		INC. 34			*			
032-1	157304-2	GEAR HOUSING	<	1				
D10		INC. 34						
033	211109-5	BALL BEARING 6201		1				
034	213459-4	O RING 32		1				
035	213160-1	OIL SEAL 14		1				
036-1	267060-7	FLAT WASHER 35		1				
037	212502-6	NEEDLE BEARING 4016		1				
038-1	254231-5	KEY 4		2				
039-1	152338-0	CYLINDER LINER COMPLETE		1				
D10		INC. 38						

Model No. HR3520 ROTARY HAMMER 35MM

Item	Parts No.	Description	I/C	QTY	N/O	Opt. 1	Opt. 2	NOTE
040-1	322237-2	IMPACT BOLT		1				
041	216004-4	STEEL BALL 7.9		3				
042-1	213383-1	X RING 25		1				
043	213374-2	O RING 23.5		1				
044	213374-2	O RING 23.5		1				
045	213554-0	O RING 44		1				
046-2	322327-1	TOOL HOLDER		1				
047	216004-4	STEEL BALL 7.9		1				
048-2	164942-3	TOOL RETAINER		1	*			
048-3	165227-0	TOOL RETAINER	X	1				
049	164569-9	GRIP HOLDER		1				
050	164543-7	GRIP BASE		1				
051	261049-7	RUBBER WASHER 5.5		1				
052	261049-7	RUBBER WASHER 5.5		1				
053	924321-5	WING BOLT M6X18		1				
054	273472-4	GRIP 32		1				
055	241827-1	FAN 82		1				
056C_	512818-2	ARMATURE ASS'Y 220V		1				
D10		INC. 55,57,58						
057-1	681625-5	INSULATION WASHER		1				
058	211033-2	BALL BEARING 608LB		1				
059	263014-2	RUBBER PIN 4		1				
060-2	265345-5	+ HEX. BOLT M5X60		2				
061C_	522513-6	FIELD ASS'Y 220V		1				
C10	654019-7	RING TERMINAL		1				
C20	654501-6	CONNECTOR P-1.25		1				
062	157305-0	MOTOR HOUSING		1	*			
C10	643603-3	BRUSH HOLDER 6-10		2	*			
C20	913206-0	SET SCREW M5X8		2	*			
D10		INC. 59			*			
062-1	183383-4	MOTOR HOUSING	O	1				
C10	643603-3	BRUSH HOLDER 6-10		2				
C20	913206-0	SET SCREW M5X8		2				
C30	819063-3	MAKITA LABEL		2				
D10		INC. 59						
063	953106-2	RIVET 0-5		4				
064	855125-3	NAME PLATE HR3520		1				
065	941152-7	FLAT WASHER 6		4				
067-1	922371-4	HEX. SOCKET HEAD BOLT M6X50		4				
068-2	922222-1	HEX. SOCKET HEAD BOLT M5X16		1	*			
068-3	922221-3	HEX. SOCKET HEAD BOLT M5X16	S	1				
069-1	942101-7	SPRING WASHER 5		1	*			
070	643600-9	BRUSH HOLDER CAP 6-10		2				
071	181038-5	A.C. CARBON BRUSH CB-105		1	*			
071-1	194975-4	CARBON BRUSH SET CB-105	<	1				
072	284056-3	REAR COVER		1				
073-1	922336-6	HEX. SOCKET HEAD BOLT M6X22		2				
075	941152-7	FLAT WASHER 6		2				

Model No. HR3520 ROTARY HAMMER 35MM

Item	Parts No.	Description	I/C	QTY	N/O	Opt. 1	Opt. 2	NOTE
076	421265-5	DUST COVER		1				
077	181653-5	HANDLE SET		1				
D10		INC. 87						
078	911243-8	PAN HEAD SCREW M5X25		3				
079	911129-6	PAN HEAD SCREW M4X16		1				
080-1	651145-3	SWITCH C3D-H-MS		1				
082	682505-8	CORD GUARD 10-90		1				
083M2	691227-9	POWER SUPPLY CORD 1.25-2-5.0		1				
084	687000-3	STRAIN RELIEF		1				
085-1	911133-5	PAN HEAD SCREW M4X18		2				
087	181653-5	HANDLE SET		1				
D10		INC. 77						
088-1	922341-3	HEX. SOCKET HEAD BOLT M6X25		2				
090	941152-7	FLAT WASHER 6		2				
400	783202-0	HEX. WRENCH 4		1				
402	321248-4	DEPTH GAUGE		1				
403E_	150908-9	PLASTIC CARRYING CASE		1				
C10	817812-2	CAUTION LABEL		1				
C20	162202-7	LATCH		2				
C30	416549-4	HANDLE		1				
C40	416556-7	COVER		2				
C50	819140-1	MAKITA LOGO LABEL		1				
408	835274-2	INNER CASE		1	*			

Please order the parts with a part number.

Print Date 2018/04/03