Model No. M804 HAMMER DRILL 16MM

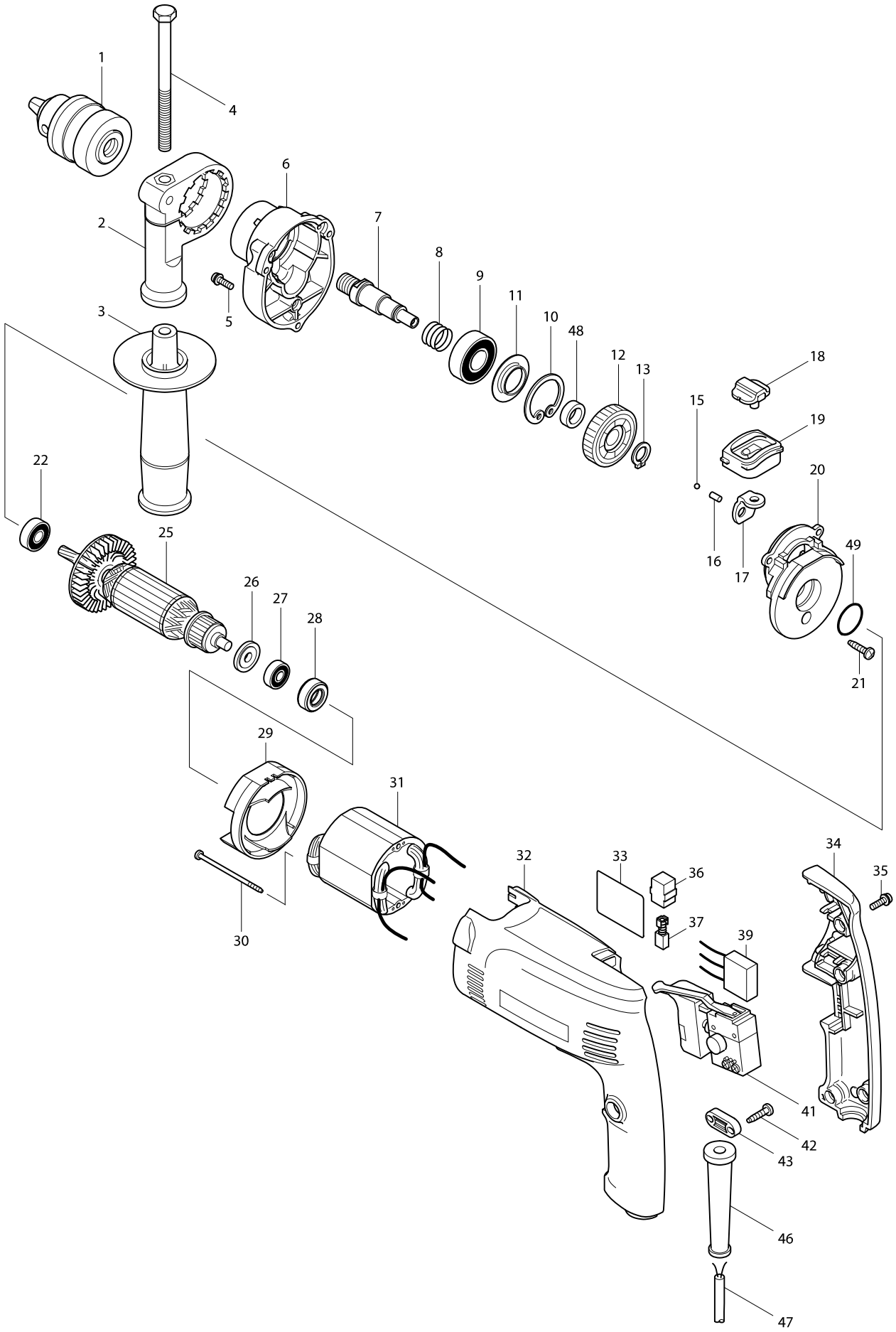

Model No. M804 HAMMER DRILL 16MM

Item	Parts No.	Description	I/C	QTY	N/O	Opt. 1	Opt. 2	NOTE
001	763161-4	DRILL CHUCK S13		1				
002	417822-5	GRIP BASE		1				
003	153503-4	GRIP 36 COMPLETE		1				
004	265495-6	HEX. BOLT M8X110		1				
005	265099-4	PAN HEAD SCREW M4X14		3				
006-1	417818-6	GEAR HOUSING		1				
007	324223-9	SPINDLE		1				
008	233330-6	COMPRESSION SPRING 16		1				
009	211241-5	BALL BEARING 6202DDW		1				
010	962153-2	RETAINING RING R-35		1				
011	257246-1	RING 19		1				
012	226589-2	HELICAL GEAR 37		1				
013-1	233938-6	RING SPRING 12		1				
015	216001-0	STEEL BALL 3.5		1				
016	256251-5	PIN 4		1				
017	345228-6	CHANGE PLATE		1				
018	417819-4	CHANGE LEVER		1				
019	417915-8	LEVER CASE		1				
020	154481-1	INNER HOUSING COMPLETE		1				
021-2	266367-8	HEX. SOCKET HEAD BOLT M4X12		3				
022	210029-0	BALL BEARING 608ZZ		1				
025	619146-7	ARMATURE 220V		1				
D10		INC. 22,26,27						
026	681662-9	INSULATION WASHER		1				
027	210062-2	BALL BEARING 607ZZ		1				
028	421808-3	RUBBER RING 19		1				
029	418681-0	BAFFLE PLATE		1				
030	266341-6	TAPPING SCREW 3X60		2				
031	529089-4	FIELD ASS'Y 220V		1				
C10	654228-8	RECEPTACLE		2				
032	418869-2	MOTOR HOUSING		1				
034	418870-7	HANDLE COVER		1				
035	265099-4	PAN HEAD SCREW M4X14		4				
036	643562-1	BRUSH HOLDER 5X8		2	*			
036-1	643552-4	BRUSH HOLDER 5-8	O	2				
037	191998-3	CARBON BRUSH CB-85		1	*			
037-1	194973-8	CARBON BRUSH CB-85	<	1				
041	650562-4	SWITCH DGQ-1108-CA-AYA21AK-01		1				
042	266326-2	TAPPING SCREW 4X18		2				
043	687140-7	STRAIN RELIEF		1				
046	682504-0	CORD GUARD 10-85		1				
047	691005-7	POWER SUPPLY CORD 0.75-2-2.0		1				
048-1	257173-2	RING 12		1				
049	213961-7	O RING 22		1				
A01	418163-2	KEY HOLDER 10		1				
A02	763441-8	CHUCK KEY S13		1				

Please order the parts with a part number.

Print Date 2018/04/19